NOVY Technical File

70003|01

Lighting
Pendant 150 cm
Black anodized

EAN 5414425235391

Functions & features

▪ Control method	Gesture Control

Dimensions

▪ Product dimensions (WxDxH) (mm)	1499 x 30 x 75

Lighting

▪ Functional lighting type	LED
▪ Functional light dimmable	▪
▪ Gross luminous flux functional lighting (Lm/m)	1983
▪ Color functional light (K)	2700-4000
▪ Color Rendering Index (CRI)	≥90
▪ Ambient lighting type	LED
▪ Ambient light dimmable	▪
▪ Gross luminous flux ambient lighting (Lm/m)	324
▪ Color ambient light	RGBW

Technical specifications

▪ Maximum power (W)	36
▪ Frequency (Hz)	50
▪ Power consumption in stand-by-mode (Ps) (W)	0
▪ Net weight (kg)	3,5
▪ Position electrical cable	Left/Right
▪ Length power supply cable (m)	4,5
▪ Safetyclass	II
▪ Voltage lighting (V)	230
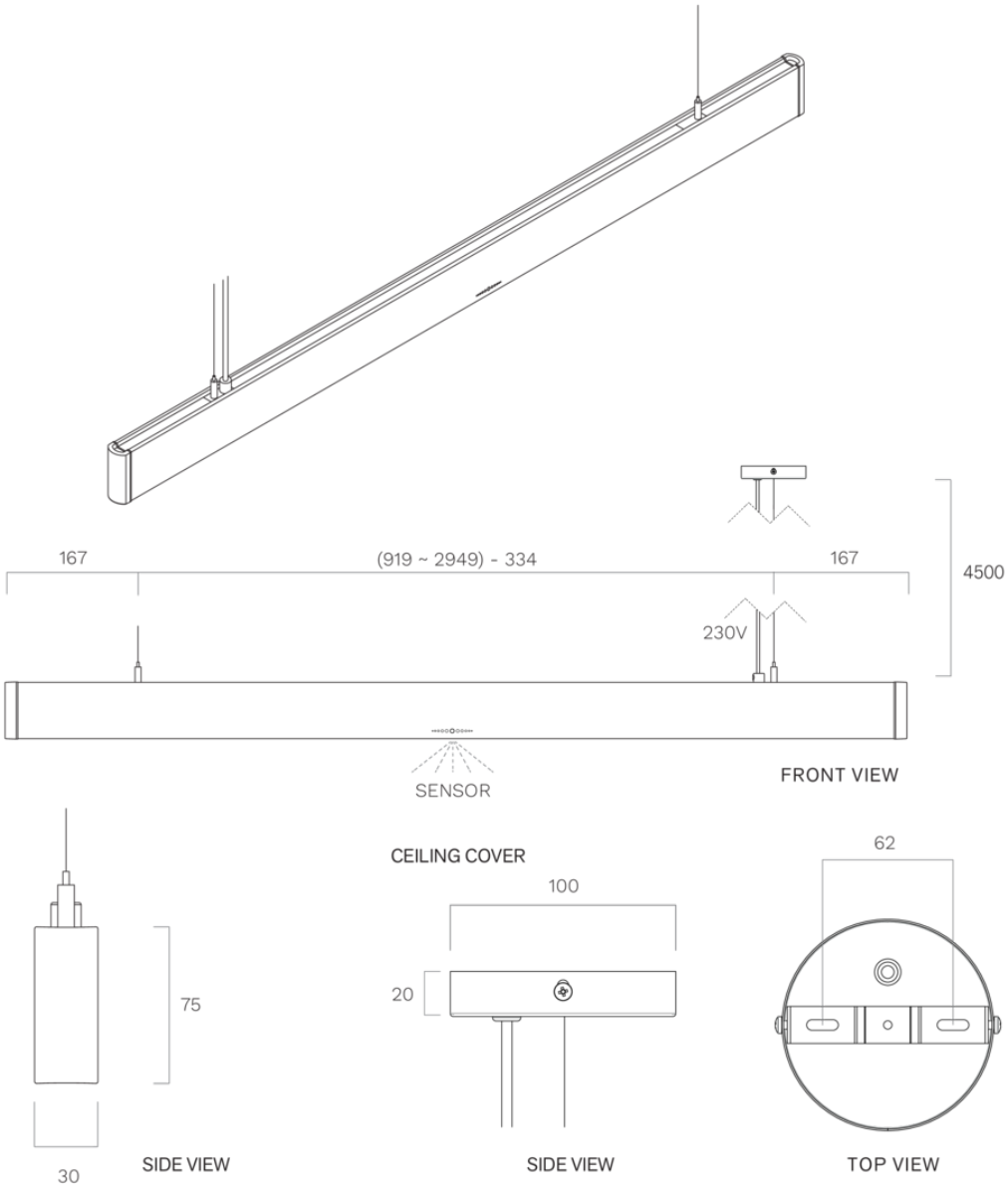
Technical drawing